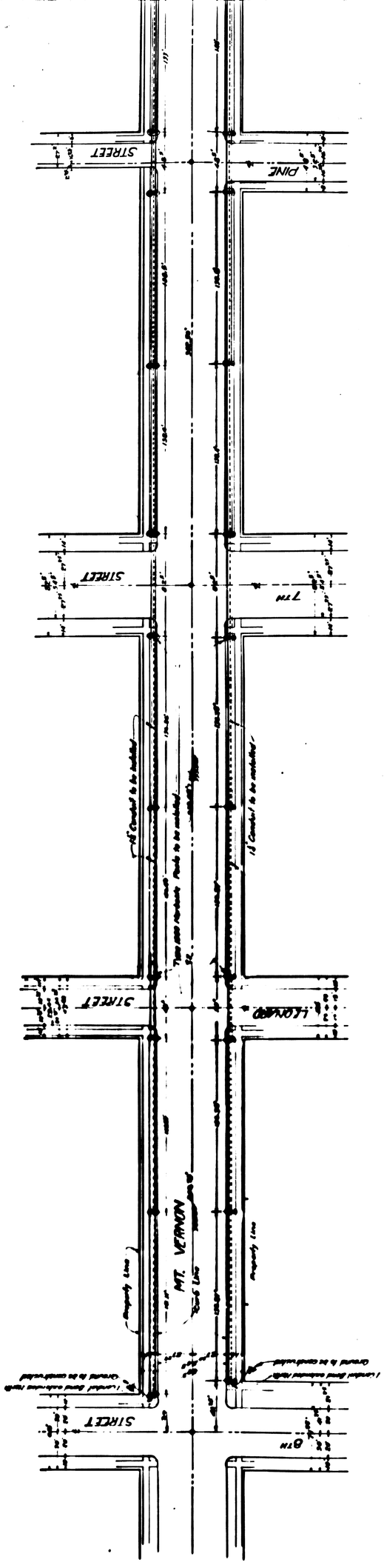

Plan No 8578 Sheet No 1
ORNAMENTAL LIGHTS
MT. VERNON ST.

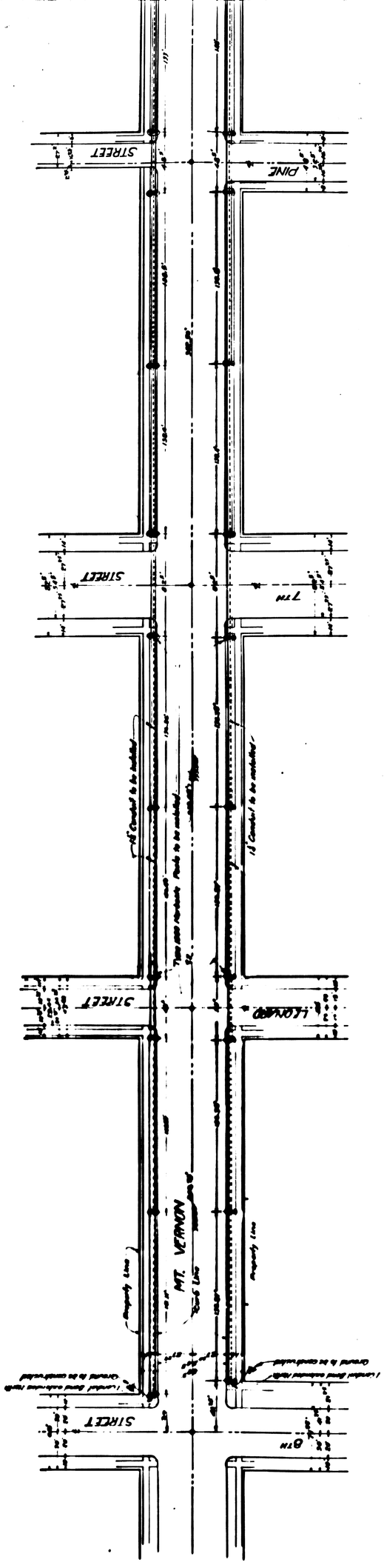

Plan No 8578 Sheet No 1
ORNAMENTAL LIGHTS
MT. VERNON ST.